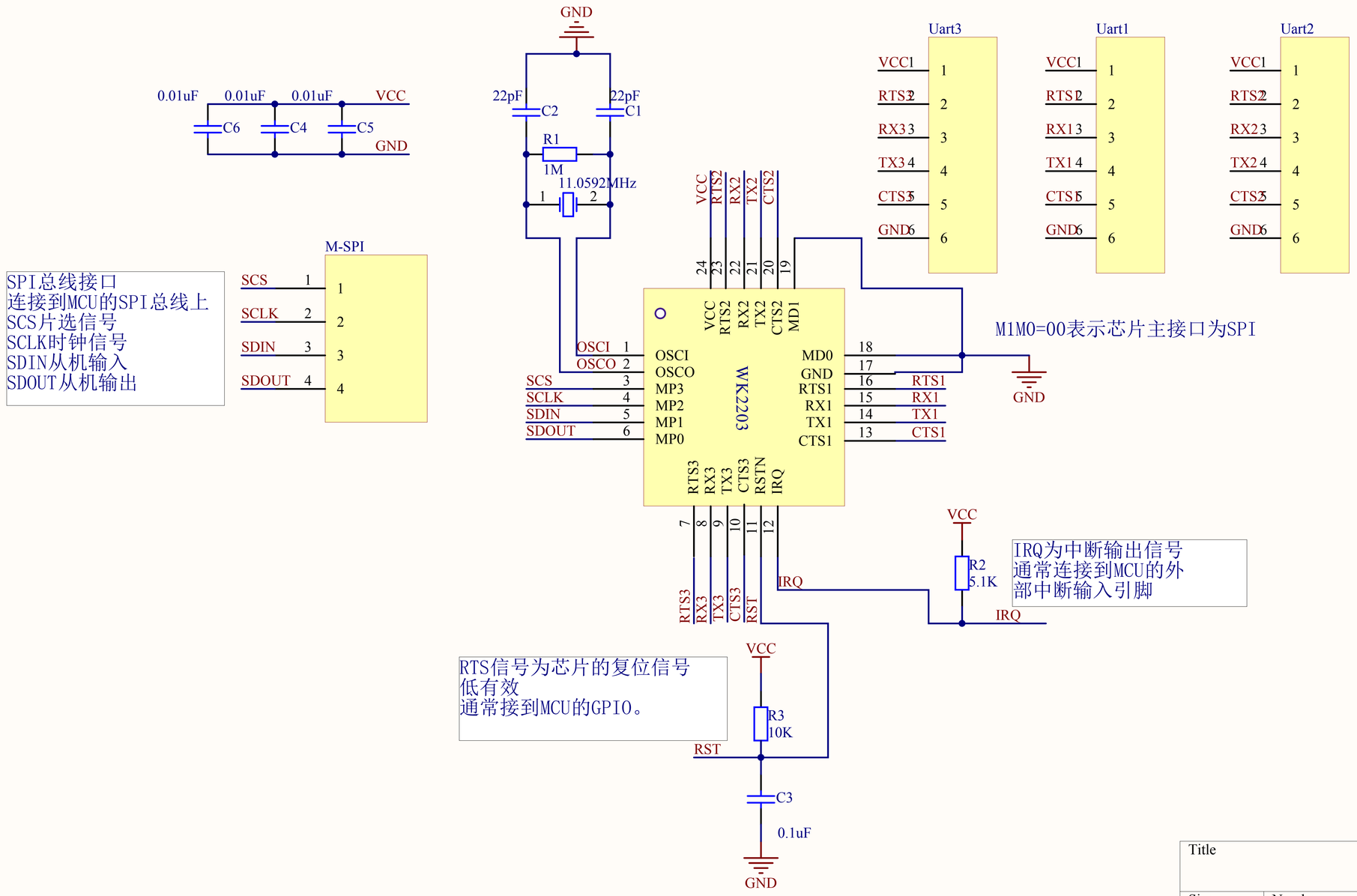

Title		
Size A4	Number	Revision
Date: 2015/5/29		Sheet of
File: E:\ \..\WK2203_SPI.SchDoc		Drawn By: